AC780BM-F4 Package

NITRONEX CORPORATION

Package Drawing - Dimensions are in Inches

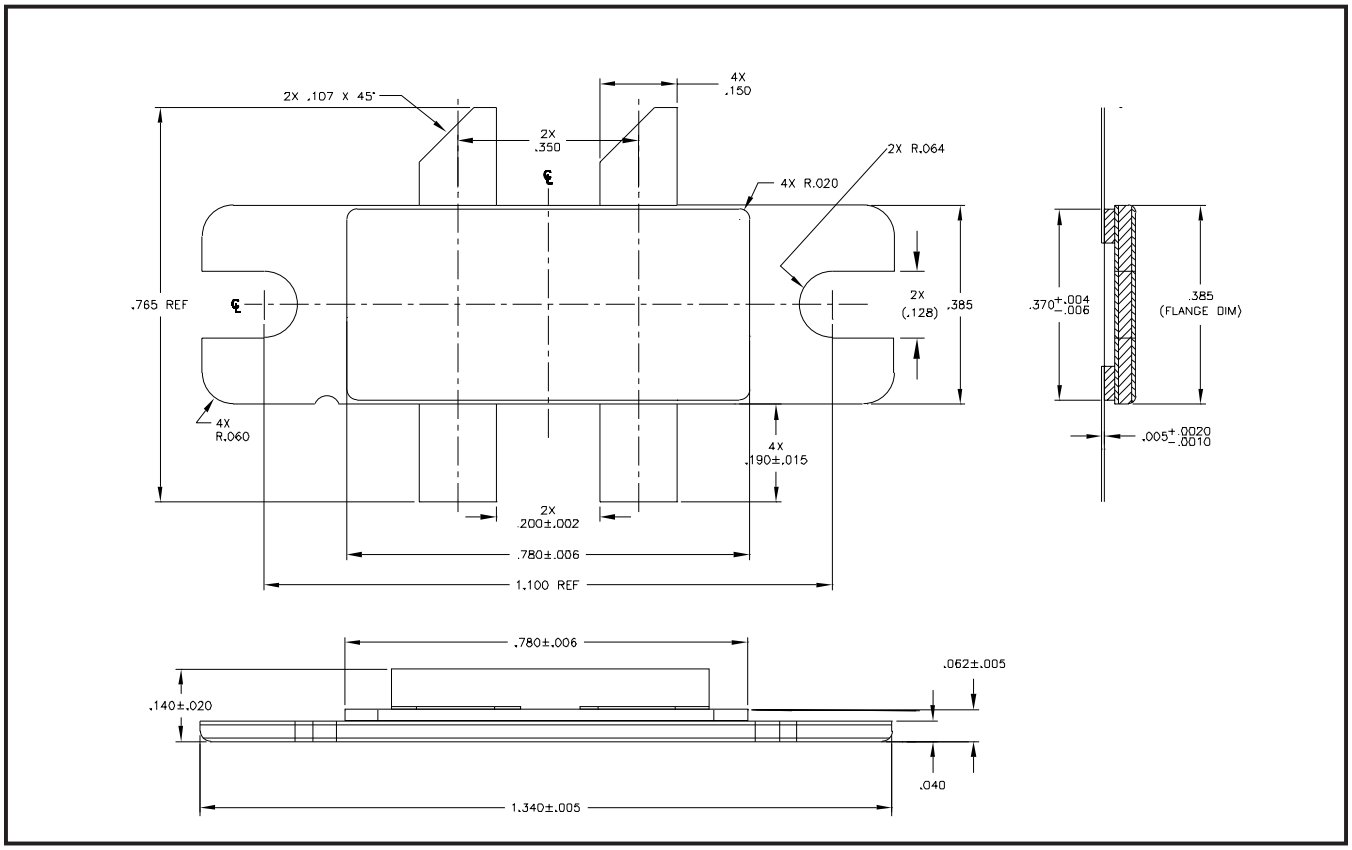

Terminal Identification

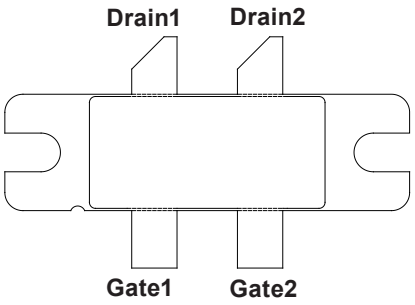

Package Photo